PILLING LAYOUT

TMBP-SP001-CS-LAY-D101

NOTES :

DRAWING REFERENCE	DESCRIPTION	REV	DATE	DESCRIPTION	PREPR'D	CHECK'D	APRV'D	CHECKED	APPROVED
		A	13-01-2026	ISSUED FOR REVIEW	NAS	AS	MR	YR	MRZ/RS

PT. PERTAMINA EP APPROVAL

PROCET :
JASA PEMBANGUNAN FASILITAS PRODUKSI STASIUN PENGUMPUL (SP)
TANJUNG MIRING BARAT & KARANGAN TIMUR

OWNER : skkmigas PERTAMINA EP

CONTRACTOR : PCG

SCALE :	DRAWING NO.	SHEET. NO.	REV
NTS	TMBP-SP001-CS-LAY-D101	1 OF 1	A

DRAWING TITLE :
PILLING LAYOUT

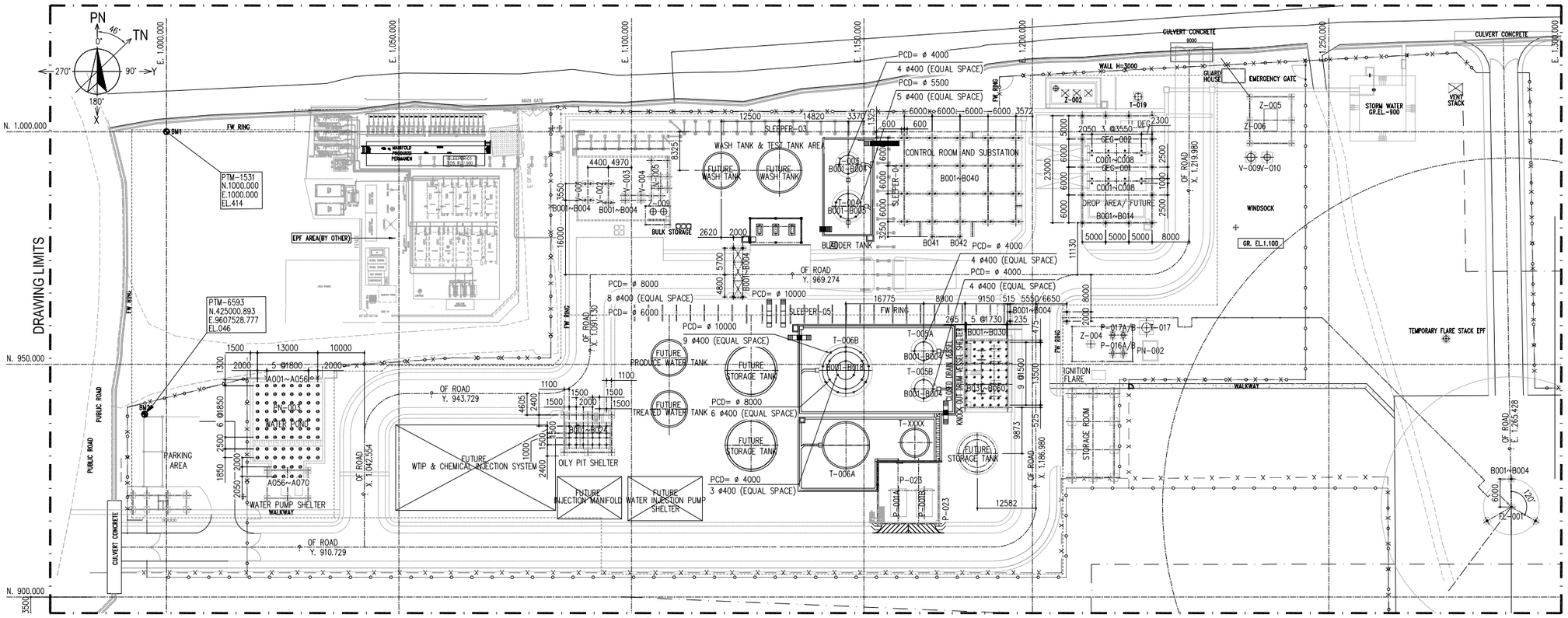

DRAWING LIMITS

PILLING LAYOUT

SCALE 1 : 500

KEY PLAN

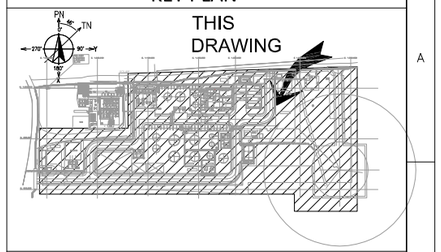

CATATAN

NOTE :

1. ALL DIMENSIONS ARE IN MILLIMETERS, ELEVATION AND COORDINATE ARE IN METERS UNLESS OTHERWISE NOTED.
2. REFERENCE OF ELEVATION AND COORDINATE
   GL. ± 0.000 = MSL+19.000 = EL+1.100
   PE = 1.000.000 : E = 424962.745
   PN = 1.000.000 : N = 9607576.210
3. PILE NUMBERING :

   A 001 F
   B 002 T
   C

   - PILE HEAD TYPE :
     F : FIXED
     T : TENSION
     BLANK : FREE HEAD
   - PILE NO.
   - PILE DIAMETER :
     A : PC PILE ø600
     B : PC PILE ø400
     C : PC PILE ø300

   PCD = PILE CIRCLE DIAMETER
4. LEGEND :
   - BORED PILE ø300
   - BORED PILE ø400
   - BORED PILE ø600

FACILITY / ITEM	PILE NUMBER	PILE DIA.	PILE NOS	EST'D LENGTH L (M)	ALLOWABLE COMP. (TON)	ALLOWABLE TENSION (TON)	ALLOWABLE LATERAL (TON)	P.C.O ELEV. (M)
WATER POND	A001 ~ A056	ø600	56	24.3	149.58	29.92	12	−3.500
	A056 ~ A070	ø600	24	23.03	149.58	29.92	12	−4.770
OILY PIT	B001 ~ B024	ø400	24	15	21.32	15.49	4.8	−3.600 & −3.900
TANK AREA WTIP T-007	B001 ~ B016	ø400	16	12	47.52	0	4.2	+1.100
TANK AREA WTIP T-008	B001 ~ B016	ø400	16	12	47.52	0	4.2	+1.100
CLOSED DRAIN VESSEL AND	B001 ~ B030	ø400	30	9	16.67	0	2.1	−3.785
KNOCK OUT DRUM VESSEL SHELTER	B031 ~ B060	ø400	30	9	16.67	0	2.1	−3.785
PIPE BRIDGE 01	B001 ~ B004	ø400	4	12	47.52	26.03	4.2	−0.400
PIPE BRIDGE 02	B001 ~ B004	ø400	4	12	47.52	26.03	4.2	−0.400
V-001	B001 ~ B004	ø400	4	4.5	19.05	0	2.94	+0.800
V-002	B001 ~ B004	ø400	4	6	23.82	0	2.94	+0.800
TEST TANK TMB (T-003)	B001 ~ B004	ø400	4	12	23.82	0	2.94	+1.100
TEST TANK KRG (T-004)	B001 ~ B005	ø400	5	12	23.82	0	2.94	+1.100
STORAGE TANK TMB (T-005A)	B001 ~ B004	ø400	4	12	23.82	0	2.94	+1.100
STORAGE TANK TMB (T-005B)	B001 ~ B004	ø400	4	12	23.82	0	2.94	+1.100
STORAGE TANK KRG (T-006B)	B001 ~ B018	ø400	18	12	23.82	0	2.94	+1.100
CONTROL ROOM AND SUBSTATION	B001 ~ B042	ø400	42	15	53.69	31.66	4.2	−0.100
GAS ENGINE GENERATOR SHELTER	B001 ~ B014	ø400	14	14	53.69	31.66	4.2	−0.100
GEG-001	C001 ~ C008	ø300	8	15	35.70	23.30	2.24	+0.200
GEG-002	C001 ~ C008	ø300	8	15	35.70	23.30	2.24	+0.200
FLARE STACK FL-001	B001 ~ B004	ø400	4	15	21.32	15.49	4.80	+0.000
TOTAL PILE			323					

BORE PILE DETAIL

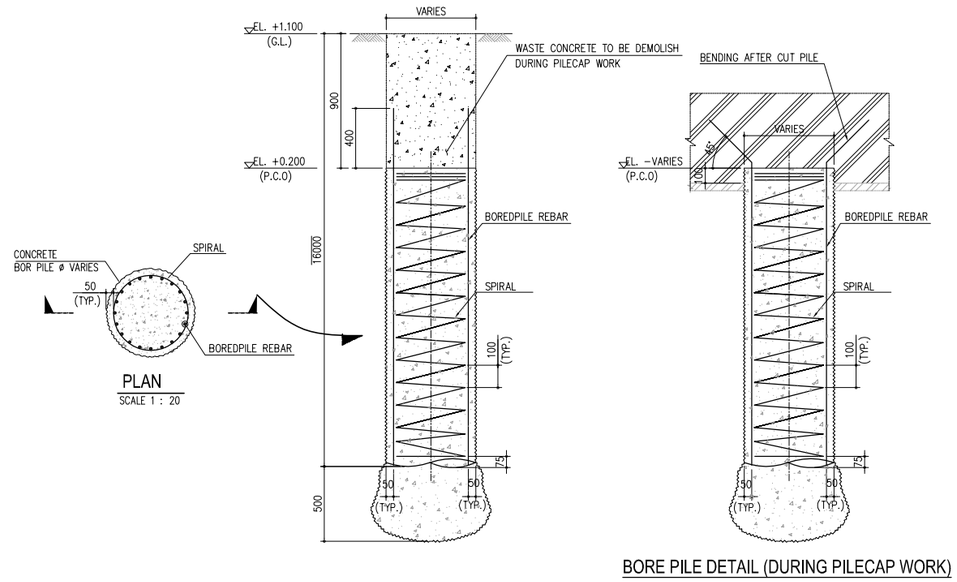

PLAN

SCALE 1 : 20

BORE PILE DETAIL (DURING PILECAP WORK)

NOTES :

1. BEFORE STARTING CONSTRUCTION, CONTRACTOR SHALL VERIFY ACTUAL FIELD CONDITION AND DETERMINE LOCATION, ELEVATION OF EXISTING GRADING AND OTHER STRUCTURE. THE CONTRACTOR SHALL TAKE NECESSARY MEASURES TO HOLD SAFE AND PREVENT DAMAGE TO ANY EXISTING FACILITIES.

DRAWING REFERENCE	DESCRIPTION	REV	DATE	DESCRIPTION	PREPR'D	CHECK'D	APRV'D	CHECKED	APPROVED
TMBP-SP001-CSI-LAY-D102	OVERALL FOUNDATION LAYOUT				NAS	AS	MR	YR	MRZ/RS
TMBP-SP001-PI-PLP-D101	OVERALL PLOT PLAN DRAWING	A	13-01-2026	ISSUED FOR REVIEW					

PT. PERTAMINA EP APPROVAL

PROCET : JASA PEMBANGUNAN FASILITAS PRODUKSI STASIUN PENGUMPUL (SP) TANJUNG MIRING BARAT & KARANGAN TIMUR

OWNER : skkmigas PERTAMINA EP

CONTRACTOR : POG

SCALE : 1 : 500 , 1 : 20

DRAWING NO. TMBP-SP001-CS-LAY-D101

SHEET. NO. 1 OF 1

REV A

DRAWING TITLE : PILLING LAYOUT